1 -Comp. Loc.: ABS

- ⇒ “1.1 ABS w/o ESP, Bosch 5.3”, page 1
- ⇒ “1.2 ABS W/ ESP , Bosch 5.3”, page 3
- ⇒ “1.3 ABS w/ ESP, Bosch 5.7”, page 5
- ⇒ “1.4 ABS Components Overview”, page 6

1.1 ABS w/o ESP, Bosch 5.3

Protected by copyright. Copying for private or commercial purposes, in part or in whole, is not permitted unless authorised by Volkswagen AG. Volkswagen AG does not guarantee or accept any liability with respect to the correctness of information in this document. Copyright by Volkswagen AG.

1 - ABS hydraulic unit -N55-
- Location: on left side of engine compartment

1 - ABS return flow pump -V39-
- Location: on left side of engine compartment

2 - ABS control module -J104-
- Location: on the hydraulic unit on left side of engine compartment

3 - ABS hydraulic unit -N55- for ABS/EDL and ABS/EDL with ASR
- Location: on left side of engine compartment

3 - ABS return flow pump -V39- for ABS/EDL and ABS/EDL with ASR
- Location: on left side of engine compartment

4 - ABS control module -J104- for ABS/EDL and ABS/EDL with ASR
- Location: on left side of engine compartment

5 - Traction control indicator lamp -K86-
- Location: In the instrument cluster

6 - Brake system indicator lamp -K118-
- Location: In the instrument cluster

7 - ABS indicator lamp -K47-
- Location: In the instrument cluster

8 - Brake system vacuum pump -V192- ⇒ page 7
- Not equipped in all vehicles

9 - Brake booster pressure sensor -G294- ⇒ page 8
- Not equipped in all vehicles

10 - Brake lamp switch -F- ⇒ page 8

11 - Data Link Connector (DLC)
- Location up to model year 2000: beneath the cover, next to the parking brake handle
- Location as of model year 2001: beneath the driver side storage tray

12 - Impulse Wheel for Left and Right Front Wheel Speed Sensor

13 - Right front ABS wheel speed sensor -G45- ⇒ page 6

13 - Left front ABS wheel speed sensor -G47- ⇒ page 6

14 - Right rear ABS wheel speed sensor -G44- ⇒ page 7

14 - Left rear ABS wheel speed sensor -G46- ⇒ page 7

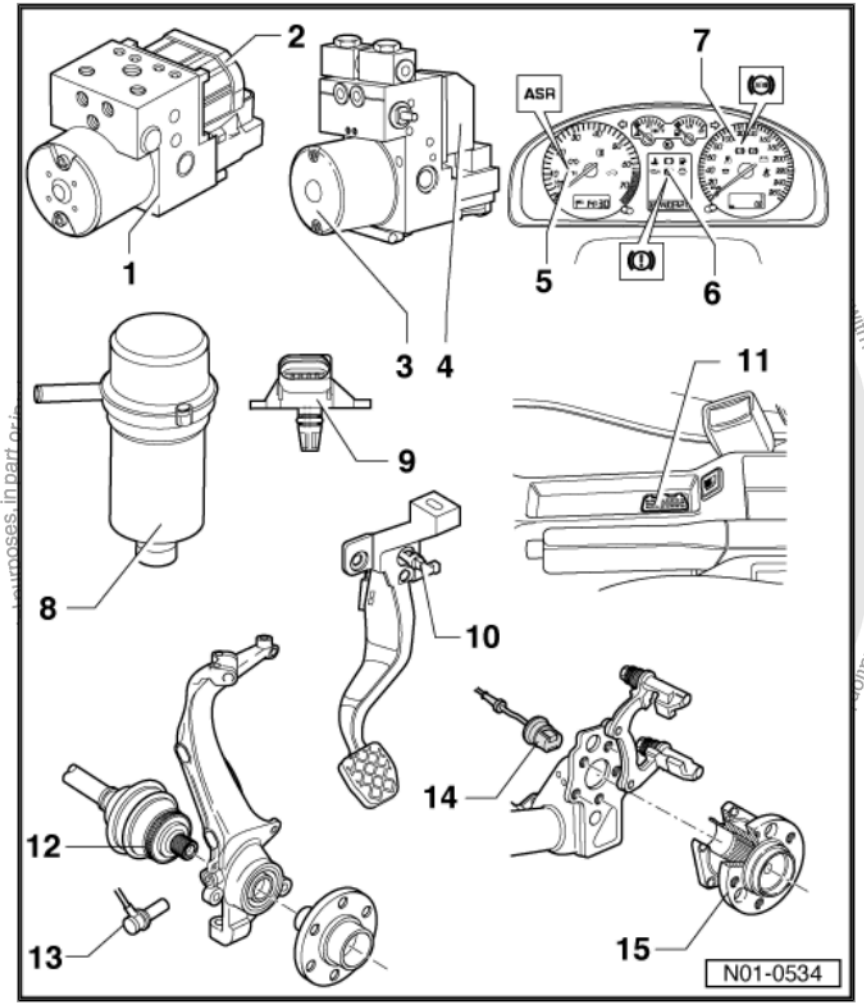

Protected by copyright. Copyright by Volkswagen AG. Volkswagen AG does not guarantee or accept any liability with respect to the correctness of information in this document. Copyright by Volkswagen AG. Commercial printed copies, in part or in whole, not permitted unless authorized by Volkswagen AG.

1.2 ABS W/ ESP , Bosch 5.3

1 - ABS hydraulic unit -N55-
- ❑ Location: on left side of engine compartment

1 - ABS return flow pump -V39-
- ❑ Location: on left side of engine compartment

2 - Traction control hydraulic pump -V156-

2 - Brake pressure sensor 1 -G201-

3 - Brake system vacuum pump -V192- ⇒ page 7
- ❑ Not equipped in all vehicles

3 - ABS hydraulic unit -N55- for ABS/EDL and ABS/EDL with ASR
- ❑ Location: on left side of engine compartment

3 - ABS return flow pump -V39- for ABS/EDL and ABS/EDL with ASR
- ❑ Location: on left side of engine compartment

4 - Brake booster pressure sensor -G294- ⇒ page 8
- ❑ Not equipped in all vehicles

5 - ABS control module -J104- for EDL/ASR/ESP
- ❑ Location: on left side of engine compartment

5 - ABS control module -J104-
- ❑ Location: on the hydraulic unit on left side of engine compartment

6 - ASR/ESP indicator lamp -K155-

5 - Traction control indicator lamp -K86-
- ❑ Location: In the instrument cluster

7 - ABS indicator lamp -K47-
- ❑ Location: In the instrument cluster

8 - Brake system indicator lamp -K118-
- ❑ Location: In the instrument cluster

9 - Transverse acceleration sensor -G200- ⇒ page 9
- ❑ Combined in one housing

9 - Rotation rate sensor -G202- ⇒ page 9
- ❑ Combined in one housing

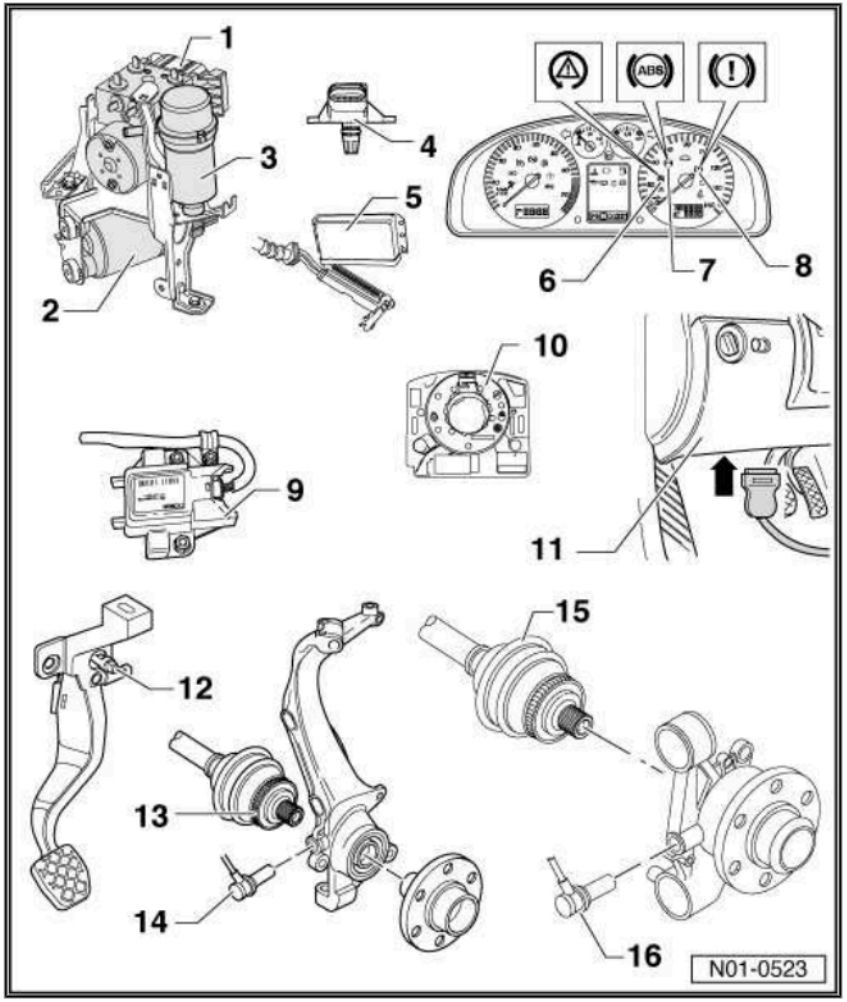

10 - Steering angle sensor - G85-
- Location: On steering column between steering wheel and steering column switch

11 - Data Link Connector (DLC)
- Location up to model year 2000: beneath the cover, next to the parking brake handle
- Location as of model year 2001: beneath the driver side storage tray

12 - Brake lamp switch -F- ⇒ page 8

12 - Brake pedal switch -F47- ⇒ page 8

13 - Impulse Wheel for Left and Right Front Wheel Speed Sensor

14 - Right front ABS wheel speed sensor -G45- ⇒ page 6

14 - Left front ABS wheel speed sensor -G47- ⇒ page 6

15 - Impulse Wheel for Right and Left Rear Speed Sensors

16 - Right rear ABS wheel speed sensor -G44- ⇒ page 7

16 - Left rear ABS wheel speed sensor -G46- ⇒ page 7

Protected by copyright. Copying for private or commercial purposes, in part or in whole, is not permitted unless authorised by Volkswagen AG. Volkswagen AG does not guarantee or accept any liability with respect to the correctness of information in this document. Copyright by Volkswagen AG.

1.3 ABS w/ ESP, Bosch 5.7

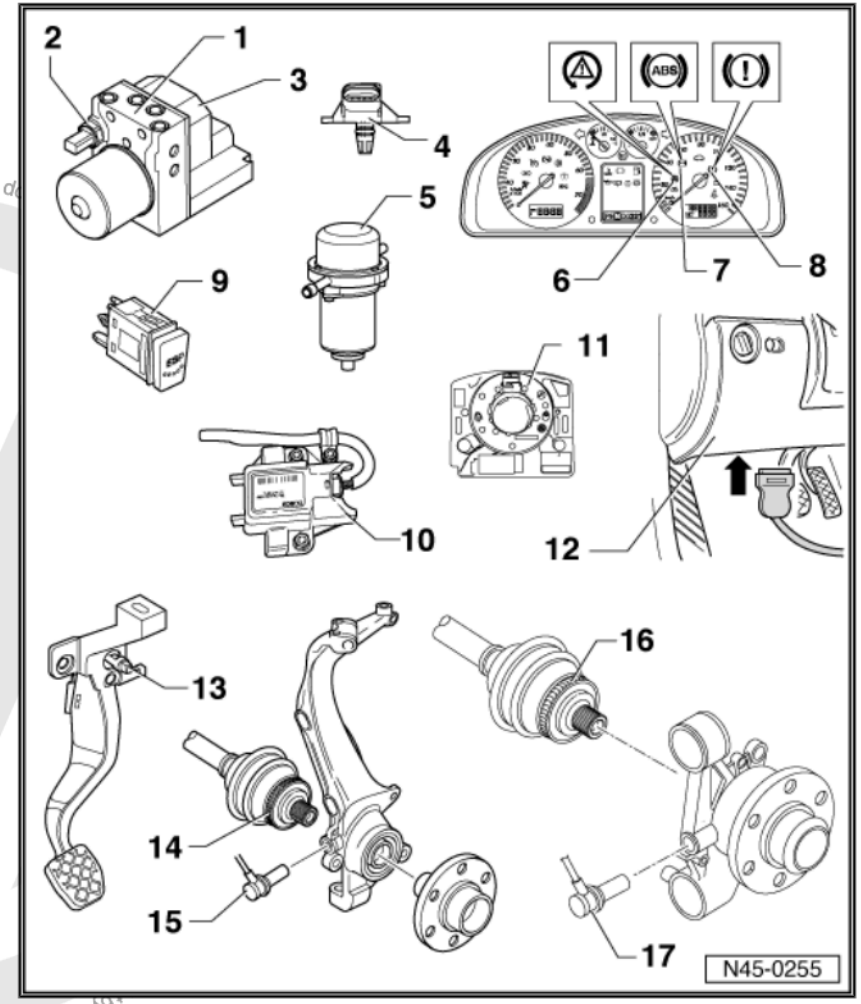

1 - ABS hydraulic unit -N55-
- ❑ Location: on left side of engine compartment

1 - ABS return flow pump -V39-
- ❑ Location: on left side of engine compartment

2 - Brake pressure sensor 1 -G201-

3 - ABS control module -J104- for EDL/ASR/ESP
- ❑ Location: on left side of engine compartment

4 - Brake booster pressure sensor -G294- ⇒ page 8
- ❑ Not equipped in all vehicles

5 - Brake system vacuum pump -V192- ⇒ page 7
- ❑ Not equipped in all vehicles

6 - ASR/ESP indicator lamp -K155-

7 - ABS indicator lamp -K47-
- ❑ Location: In the instrument cluster

8 - Brake system indicator lamp -K118-
- ❑ Location: In the instrument cluster

9 - ASR/ESP button -E256-

10 - Transverse acceleration sensor -G200- ⇒ page 9
- ❑ Combined with G202 in one housing
- ❑ Early production is standalone ⇒ page 9

10 - Rotation rate sensor -G202- ⇒ page 9
- ❑ Combined with G200 in one housing ⇒ page 9

11 - Steering angle sensor -G85-
- ❑ Location: On steering column between steering wheel and steering column switch

12 - Data Link Connector (DLC)
- ❑ Location up to model year 2000: beneath the cover, next to the parking brake handle
- ❑ Location as of model year 2001: beneath the driver side storage tray

13 - Brake lamp switch -F- ⇒ page 8

13 - Brake pedal switch -F47- ⇒ page 8

14 - Impulse Wheel for Left and Right Front Wheel Speed Sensor

Protected by copyright. Copying for private or commercial purposes, in part or in whole, is not permitted unless authorised by Volkswagen AG. Volkswagen AG d

15 - Right front ABS wheel speed sensor -G45- ⇒ page 6

15 - Left front ABS wheel speed sensor -G47- ⇒ page 6

16 - Impulse Wheel for Right and Left Rear Speed Sensors

17 - Right rear ABS wheel speed sensor -G44- ⇒ page 7

17 - Left rear ABS wheel speed sensor -G46- ⇒ page 7

Protected by copyright. Copying for private or commercial purposes, in part or in whole, is not permitted unless authorised by Volkswagen AG. Volkswagen AG does not guarantee or accept any liability with respect to the correctness of information in this document. Copyright by Volkswagen AG.

1.4 ABS Components Overview

1.4.1 Front Speed Sensors

1 - Right front ABS wheel speed sensor -G45-

1 - Left front ABS wheel speed sensor -G47-

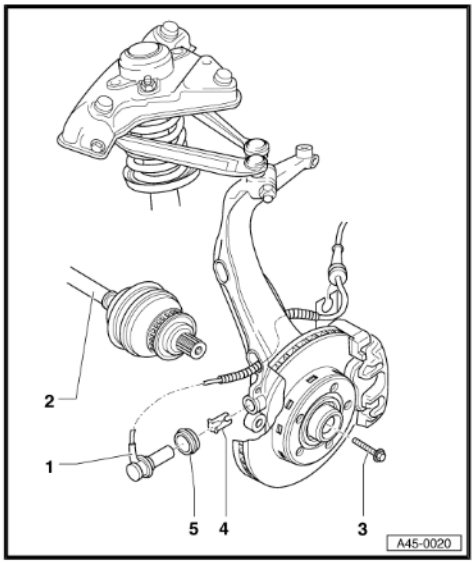

1.4.2 Rear Speed Sensors

2 - Right rear ABS wheel speed sensor -G44-

2 - Left rear ABS wheel speed sensor -G46-

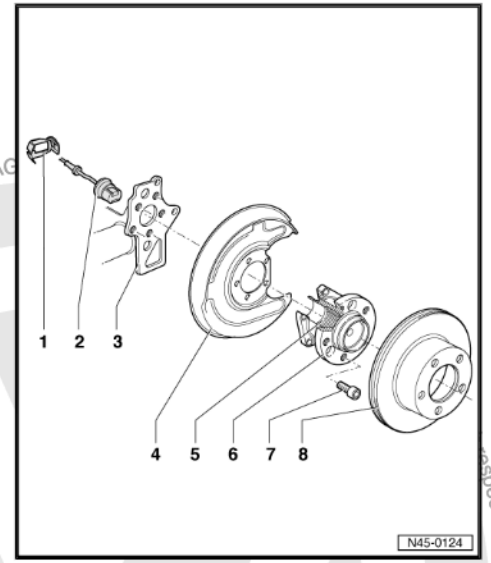

1.4.3 Brake System Vacuum Pump

1 - Electrical connection to Brake system vacuum pump -V192-

- - Only for gasoline engines with automatic transmissions

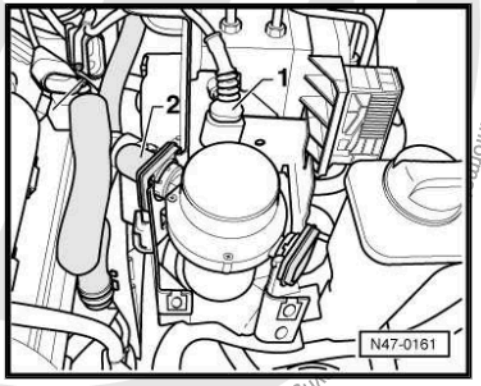

Protected by copyright. Copying for private or commercial purposes, in part or in whole, is not permitted unless authorised by Volkswagen AG. ...ight by Volkswagen AG. ...spect to the correctness of inform...

1.4.4 Brake Booster Pressure Sensor

1 - Electrical connection to Brake booster pressure sensor -G294-

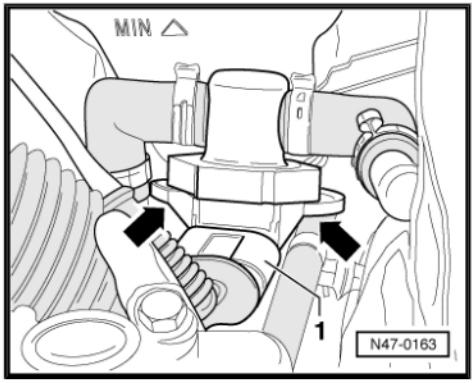

1.4.5 Brake Pedal Switch, through MY 2002

3 - Brake lamp switch -F-

- Brake pedal switch -F47-

4 - Clutch pedal switch -F36-

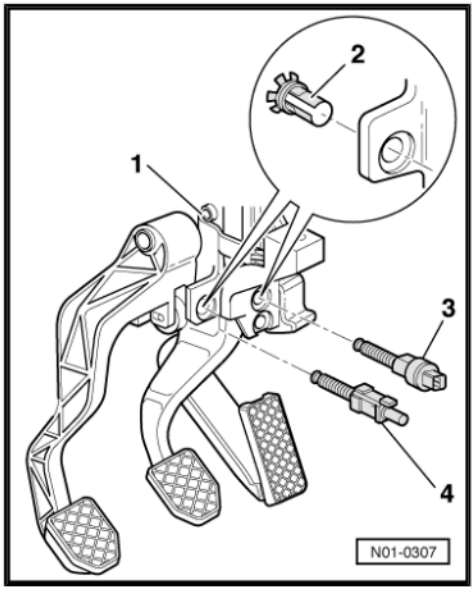

Protected by copyright. Copying for private or commercial purposes, in part or in whole, is not permitted unless authorised by Volkswagen AG. Volkswagen AG does not guarantee or accept any liability with respect to the correctness of information in this document. Copyright by Volkswagen AG.

1.4.6 Transverse Acceleration Sensor and Rotation Rate Sensor

- - Transverse acceleration sensor -G200-

- - Rotation rate sensor -G202-

- - The transverse acceleration sensor and the rotation rate sensor are combined in a single housing. It is located beneath the rear seat bench

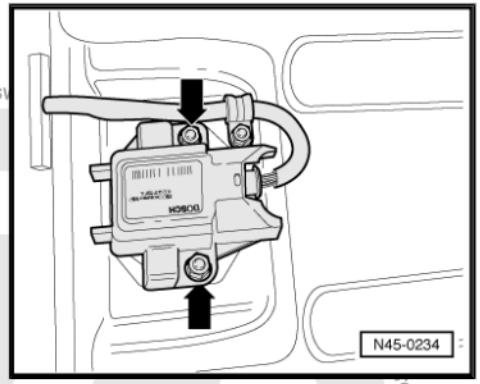

1.4.7 Rotation Rate Sensor, early production

- - Rotation rate sensor -G202-

- - The rotation rate sensor is located in the left front footwell under the floor covering.

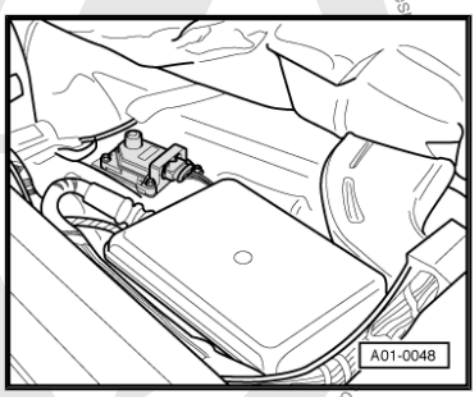

1.4.8 Transverse Acceleration Sensor, early production

- - Transverse acceleration sensor -G200-

- - The transverse acceleration sensor is located on the driver side, beneath the floor covering and behind the seat cross member

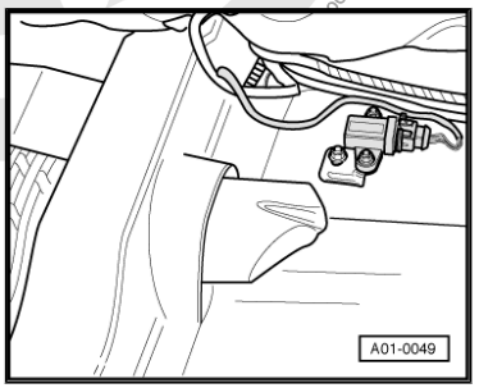

Protected by copyright. Copying for private or commercial purposes, in part or in whole, is not permitted unless authorised by Volkswagen AG. Volksw